Cabinet Model: D9P1

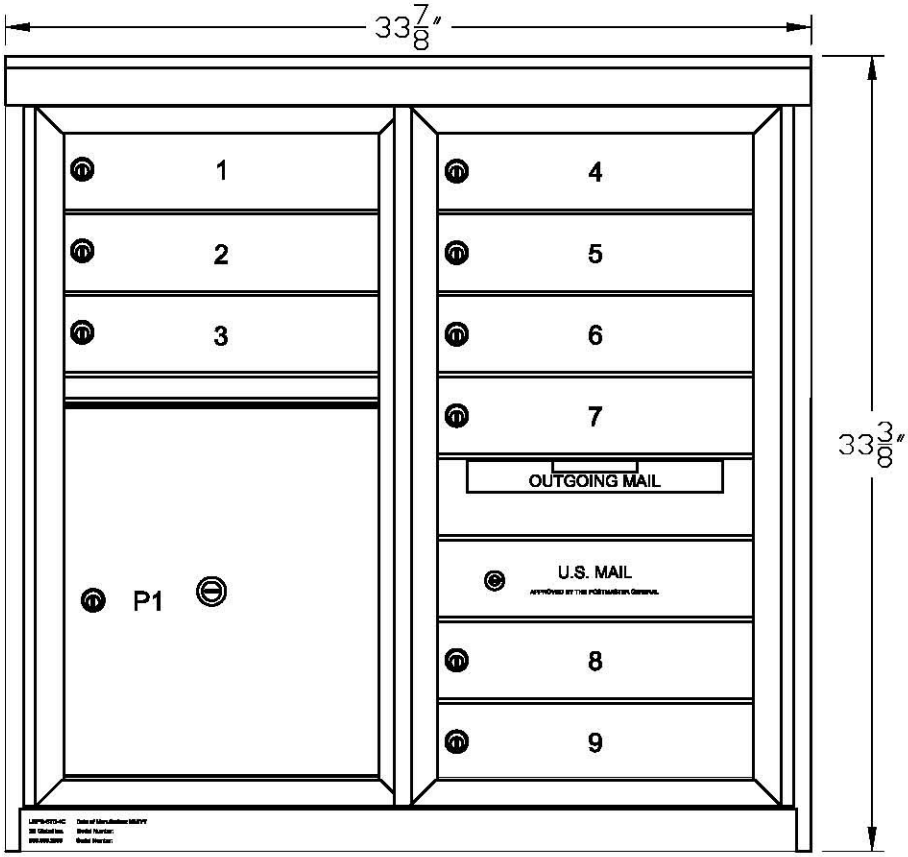

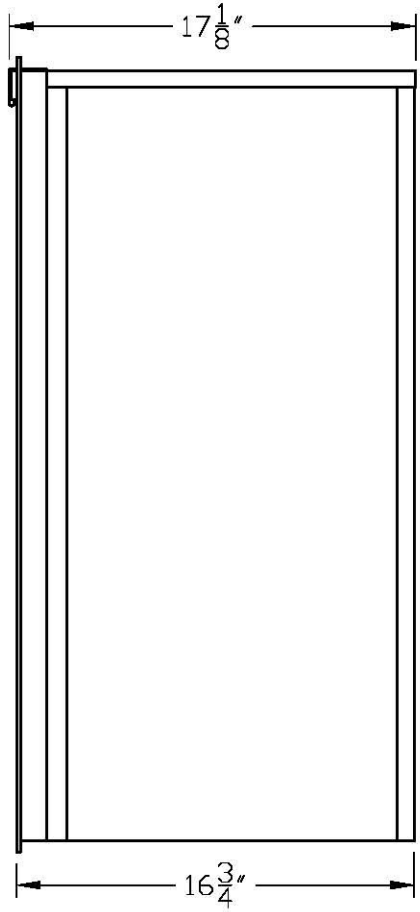

SIDE VIEW

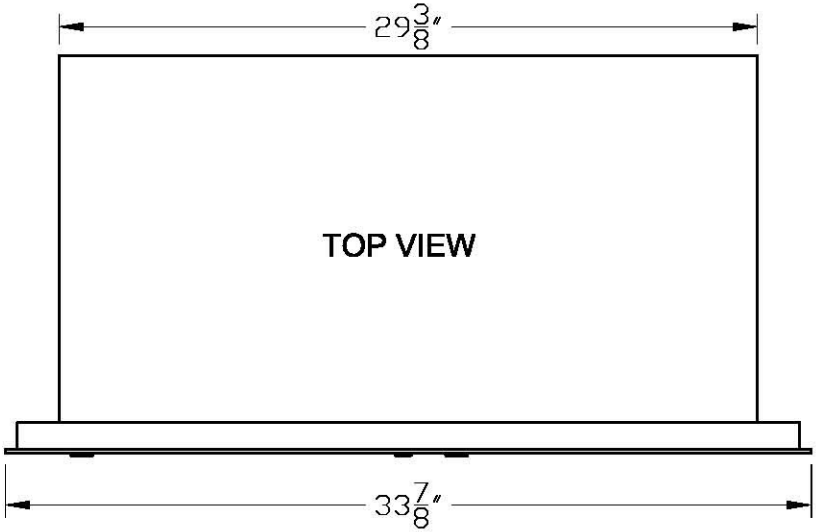

TOP VIEW

U.S. Mail Supply, Inc.
3065 N. 124th St.
Brookfield, WI 53005
Phone: 800-571-0147 Fax: 800-589-1068
Visit Our Website: www.usmailsupply.com